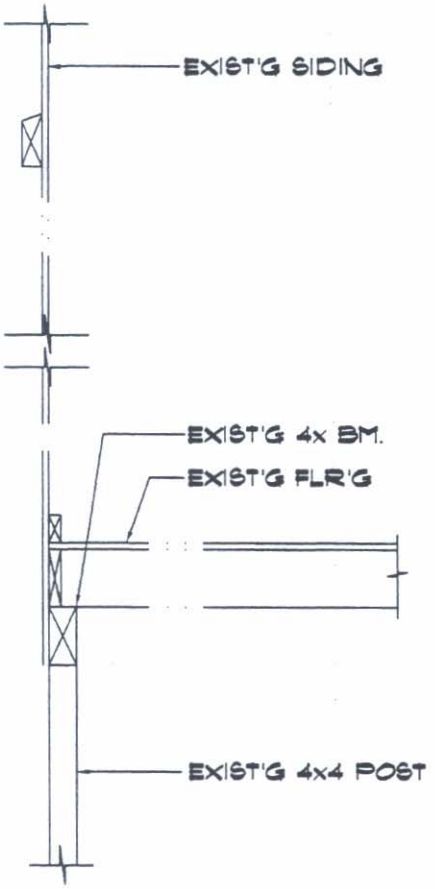

EXISTING COND.

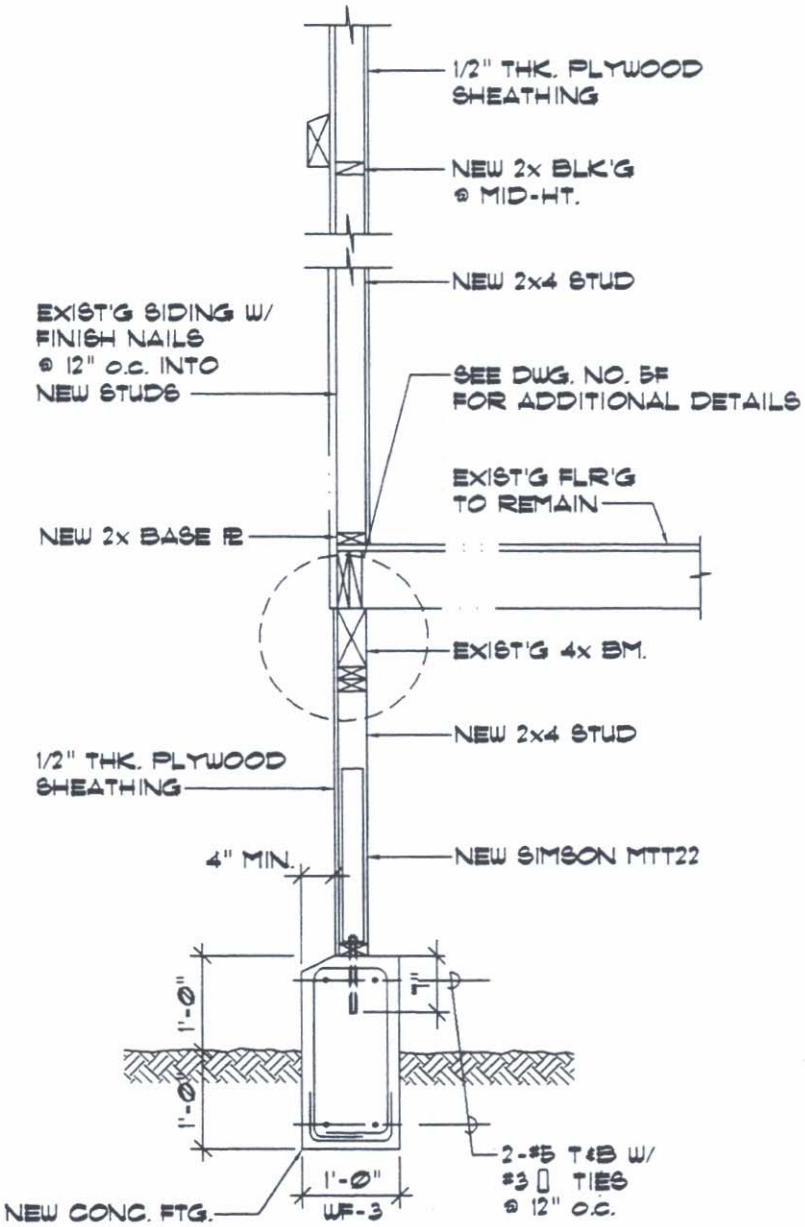

UPGRADED COND.

UPGRADE SINGLE WALL W/ INTERIOR STUDS, PLYWOOD SHEATHING & TIE STRAP	SEISMIC ZONE	WIND EXPOSURE	DRAWING NUMBER
		C	5E