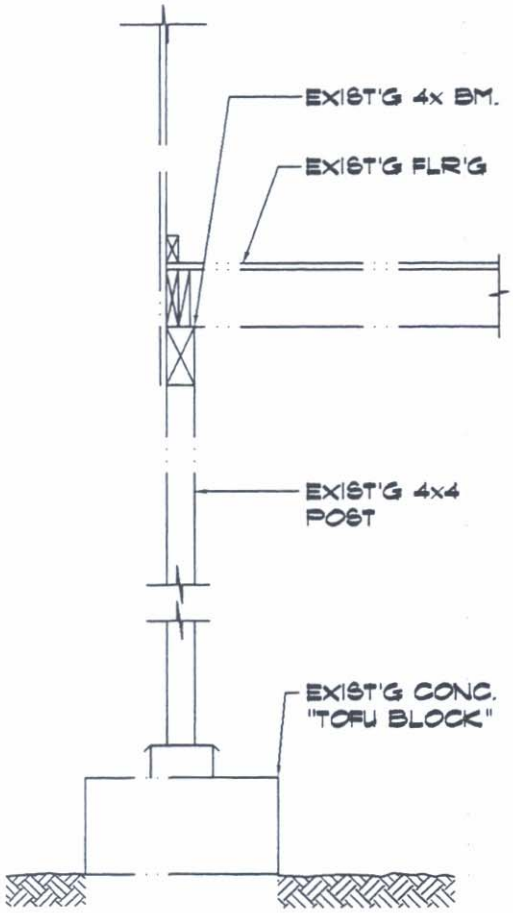

EXISTING COND.

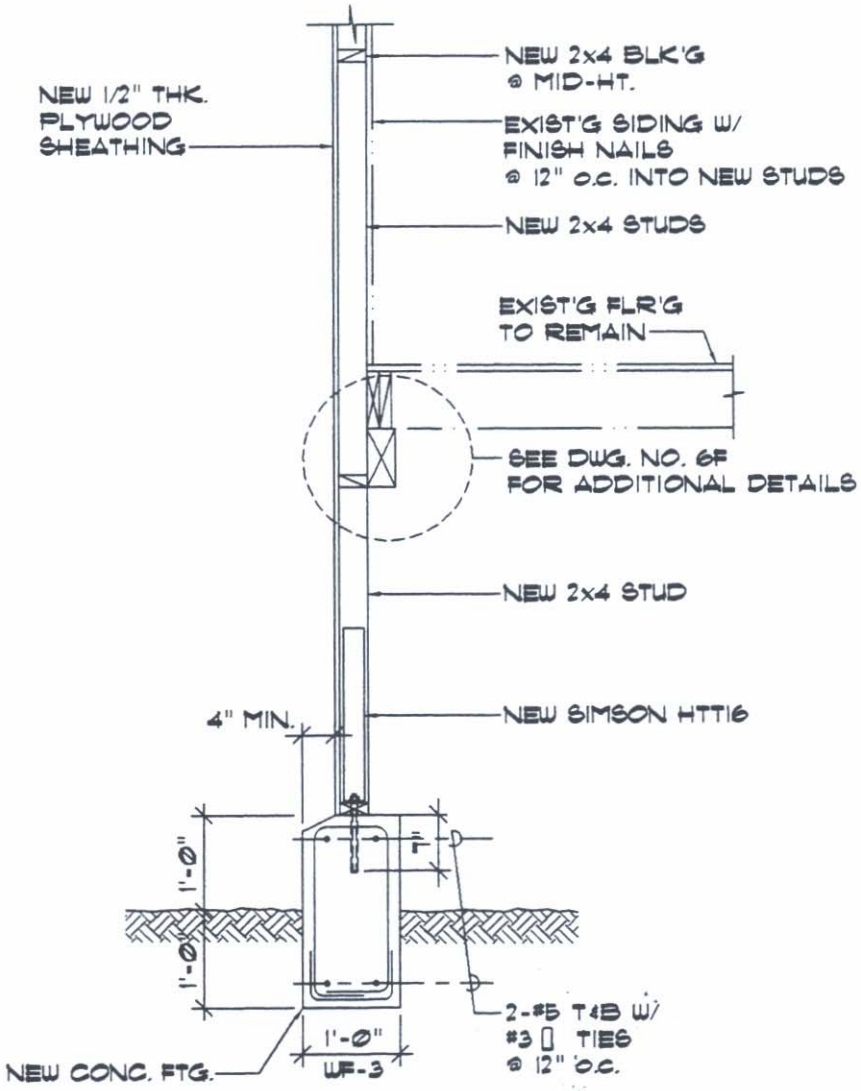

UPGRADED COND.

UPGRADE SINGLE WALL W/ EXTERIOR STUDS, PLYWOOD SHEATHING & TIE STRAP	SEISMIC ZONE	WIND EXPOSURE	DRAWING NUMBER
	4		6E